Interfaces, VSwitches and Port Groups

Jul 2017

If you are like me, and used earlier versions of VMWare (ver4) then version 6 might be a little confusing when it comes to the networking architecture. When I used to use older versions of VMWare (never used vCenter) you just as signed a physical interface to a VM. While you can still do this, it's not as obvious how to do it.

Consider my example below, I three servers, all connected to a switch, and I am passing multicast traffice between them, that is being processed in a particular way at each stage. Basically I want an input, two processing stages, a storage device and an output.

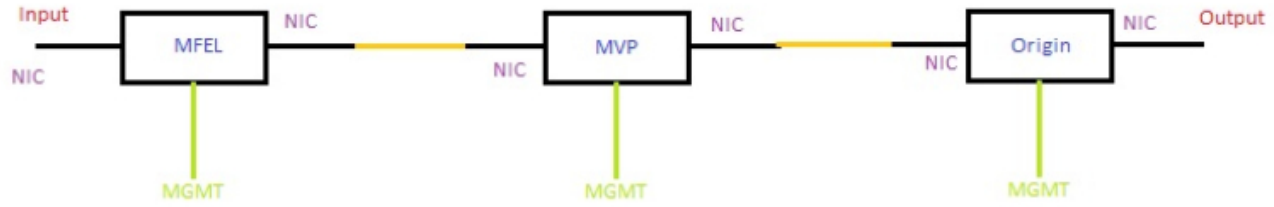

Each server (VM) has three interfaces, Management, Data In and Data Out. The reality is that for this example, on my physical server I will be using only two physical interfaces, one for management and one for data.

However, to be able to share and manage these interfaces, we need to create some Virtual Switches, and Port Groups. Now we could just create one port group and assign that group to all of the data interfaces, but this is not a real world use case, and it limits our flexibility.

Look at the diagram below.

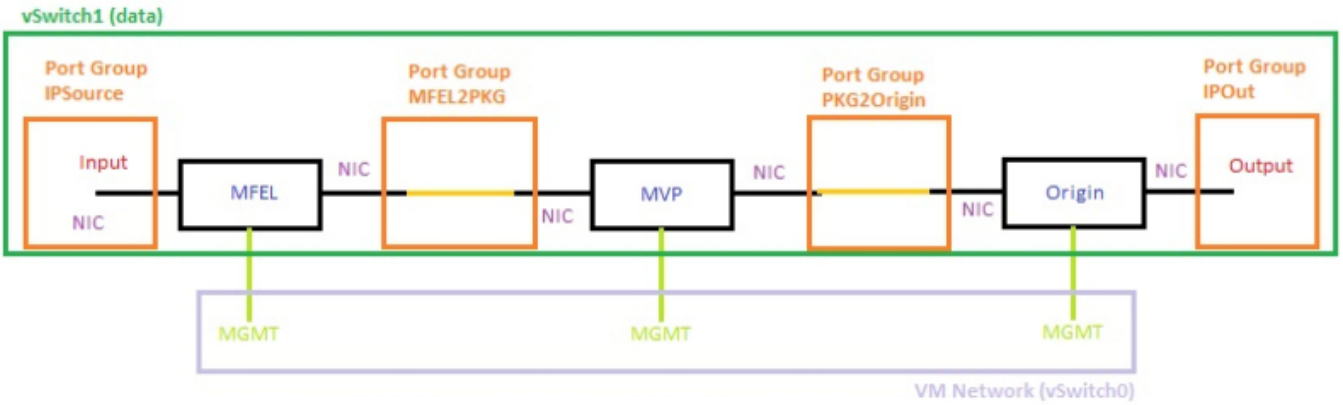

Above we can see that there are four port groups (in Orange) and they are in a virtual switch, and there are three management interfaces in vSwitch0.

From the ESXi application (not the Web UI) we can see the following (you can get this in the Web UI, i prefer this layout).

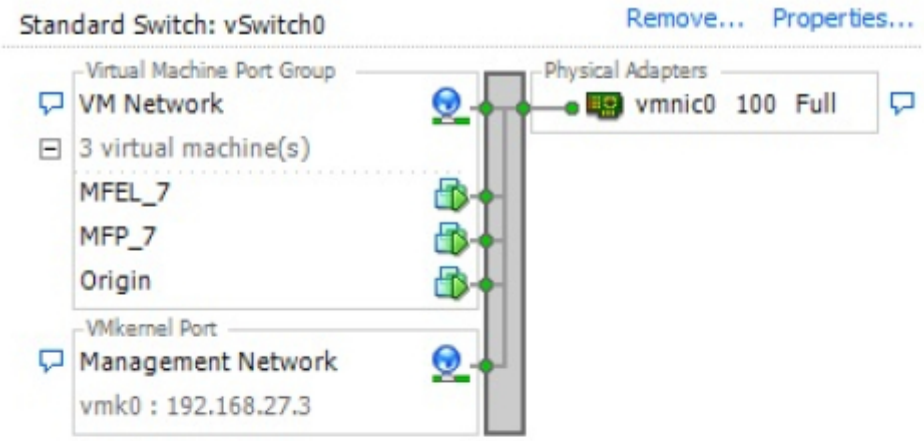

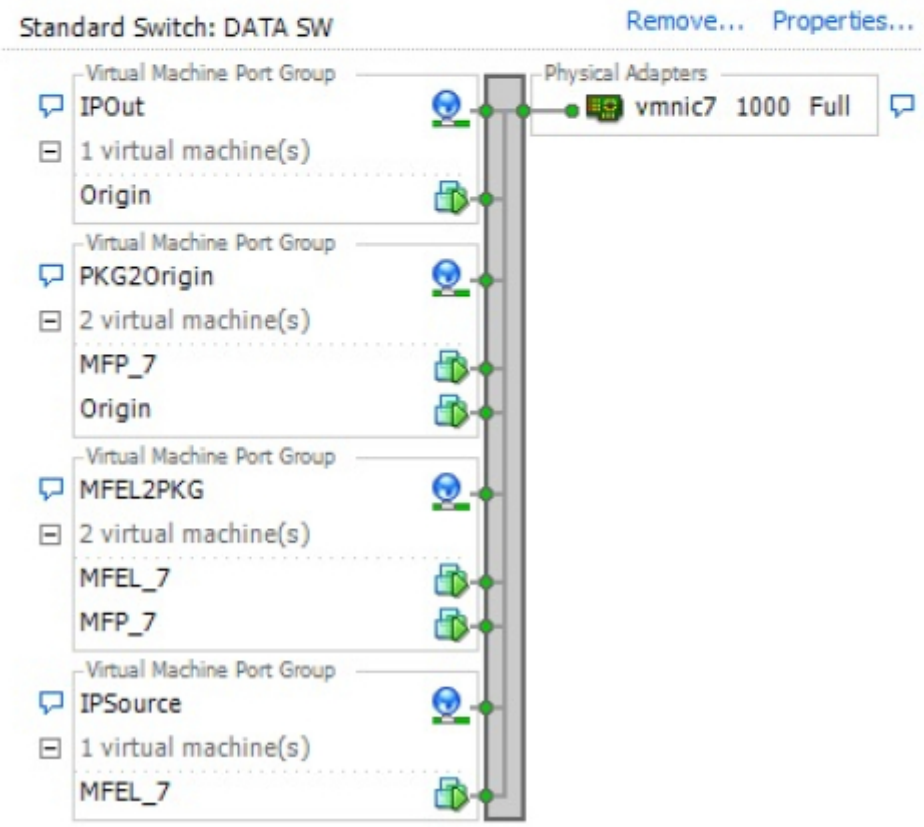

Above we can see the following:

There are two virtual switches (vSwitch0 is created by default)
vSwitch0
DATA SW

vSwitch0 is associated with the physical interface vmnic0
vSwitch DATA SW is associated with the physical interface vmnic7

vSwitch0 contains a Port Group called VM Network (created by default) and has the following interfaces from the VMs.
MFEL_7
MFP_7
Origin

vSwitch DATA SW contains the following Port Groups

IPSource
MFEL2PKG
PKG2Origin
IPOut

Each of these Port Groups contains a data interface from each VM.

Below we can see the page in VMWare that is used to configure the VM options.

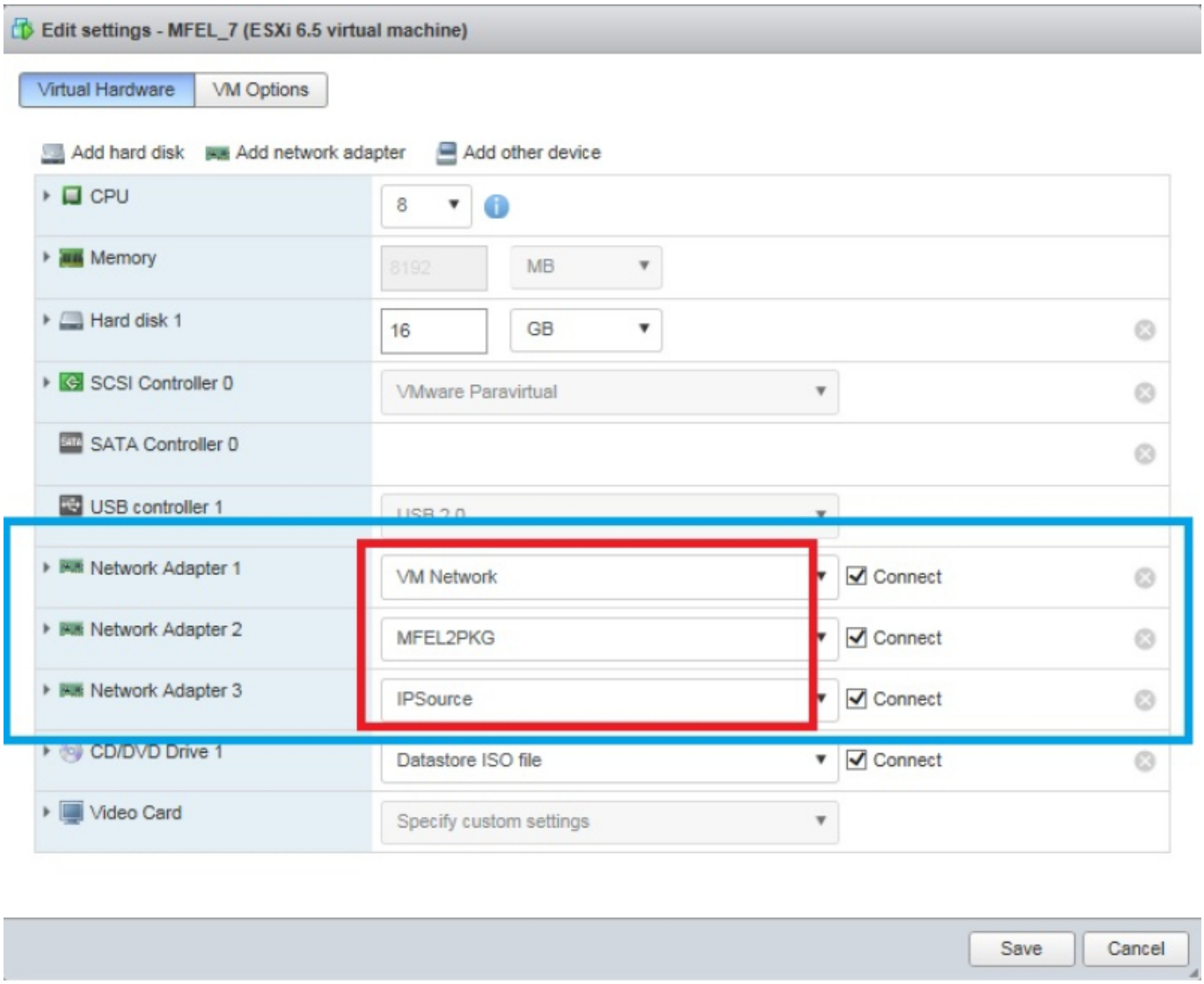

There are three Network Adapters that have been added to each VM (this is for the MFEL VM). Each network has then been assigned to a Port Group (so you need to create your Port Groups and Switches before your VMs). For example Network Adapter 2 is assigned to Port Group MFEL2PKG. We know the Port Group MFEL2PGK is assigned to vSwitch DATA SW, and that vSwitch DATA SW is assigned to physical interface vmnic7. So any traffic to or from this port will be via the vmnic7 physical port.

From:
https://wiki.alanwalker.uk/ - **WalkerWiki - wiki.alanwalker.uk**

Permanent link:
https://wiki.alanwalker.uk/doku.php?id=interfaces_vswitches_and_port_groups&rev=1500370272

Last update: **2023/03/09 22:35**