Circuit and PCB layouts

Mar 2017

The Circuit Diagram

Below is the circuit diagram for the Raspberry Pi NTP Clock. Bear in mind that I am using two Opto Isolators that are 8 pin packages, there are 16 pin packages that have enough connections that you can also use, it's up to you.

Please also remember that this project only uses 3.3v. So yes you do still power the Raspberry Pi with 5v, but circuit only uses the 3v3 pin on the Raspberry Pi, all resistor values reflect the fact that I am using 3v3.

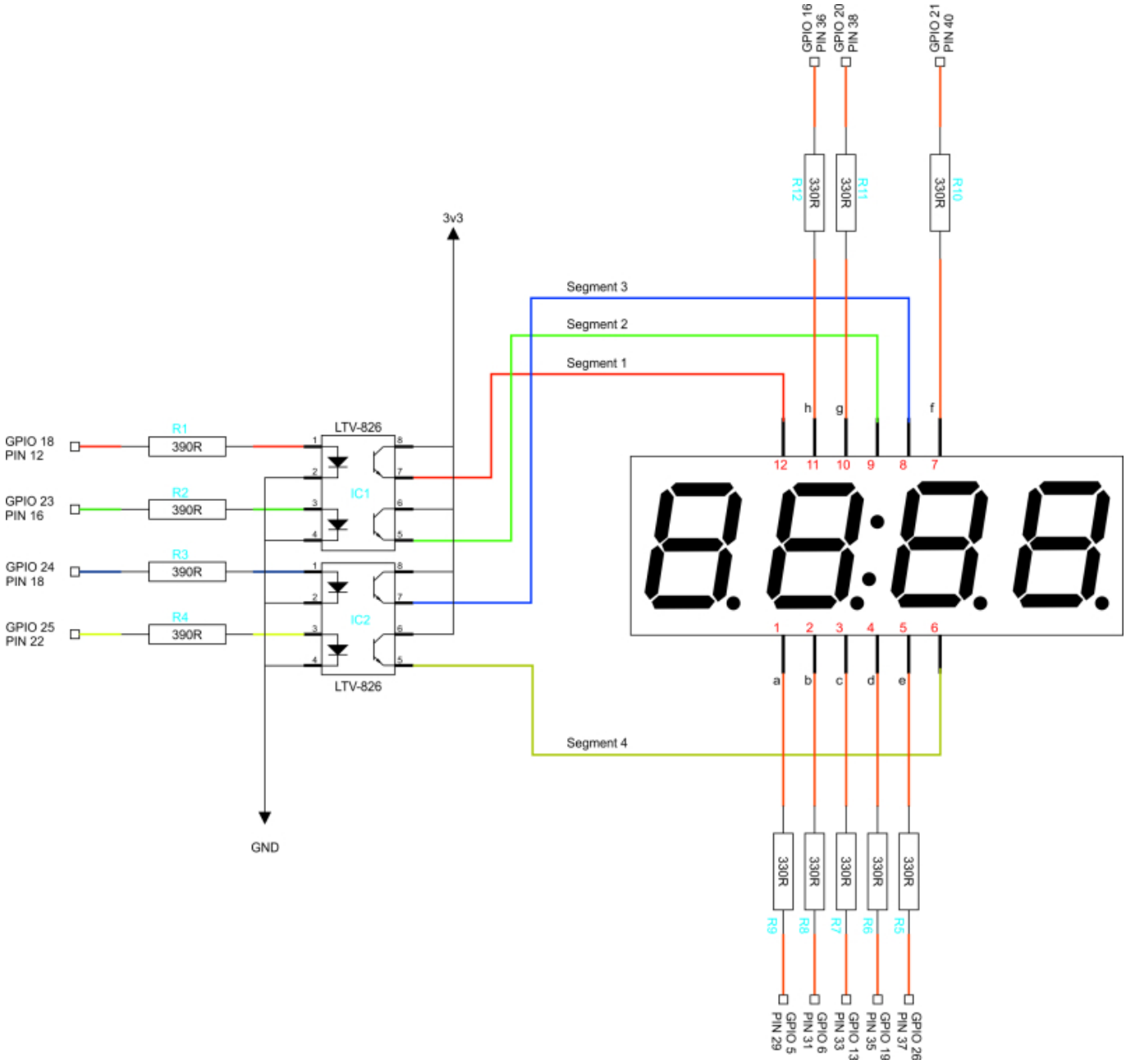

PCB Layout

Here is what the PCB layout looks like (from the CAD drawings) I have not had any made yet, so this may be subject to change (I am writing this page Early March 2017).

```
Full PCB - All Layers
```

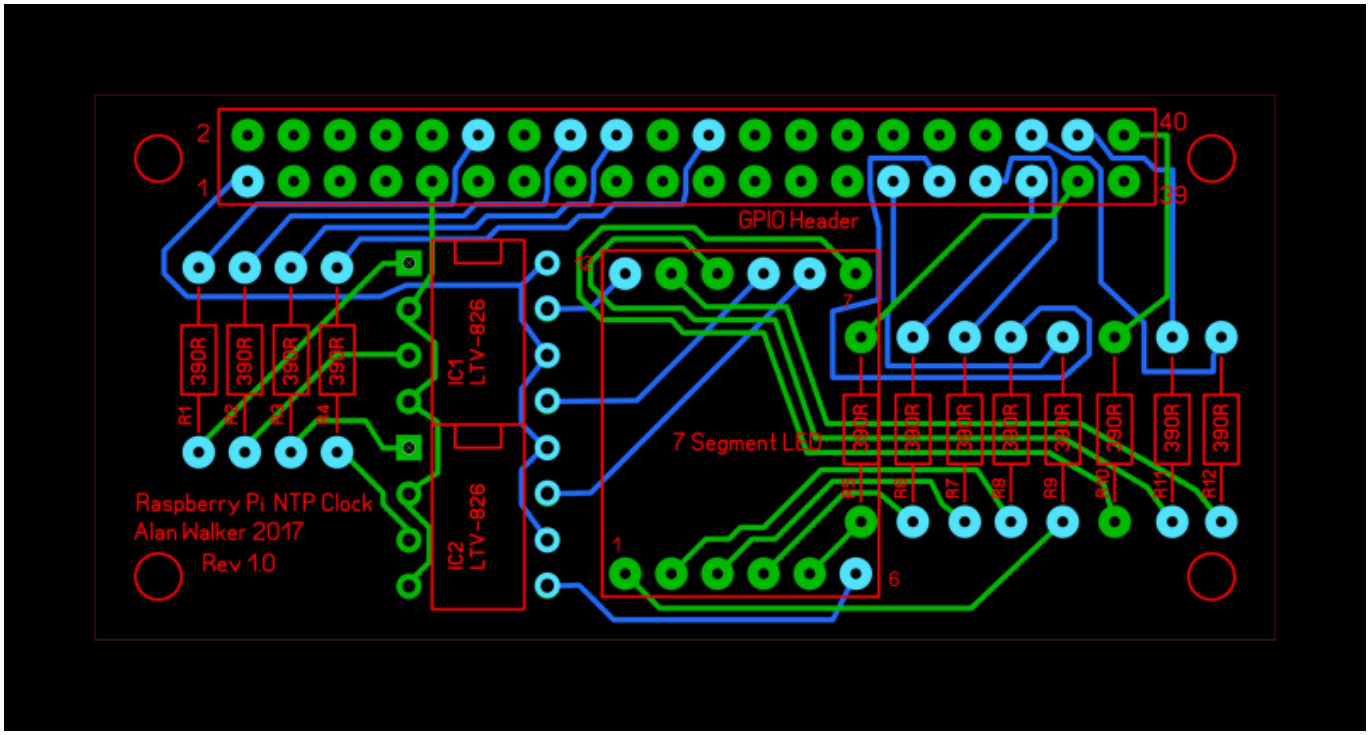


```
Photo View
```

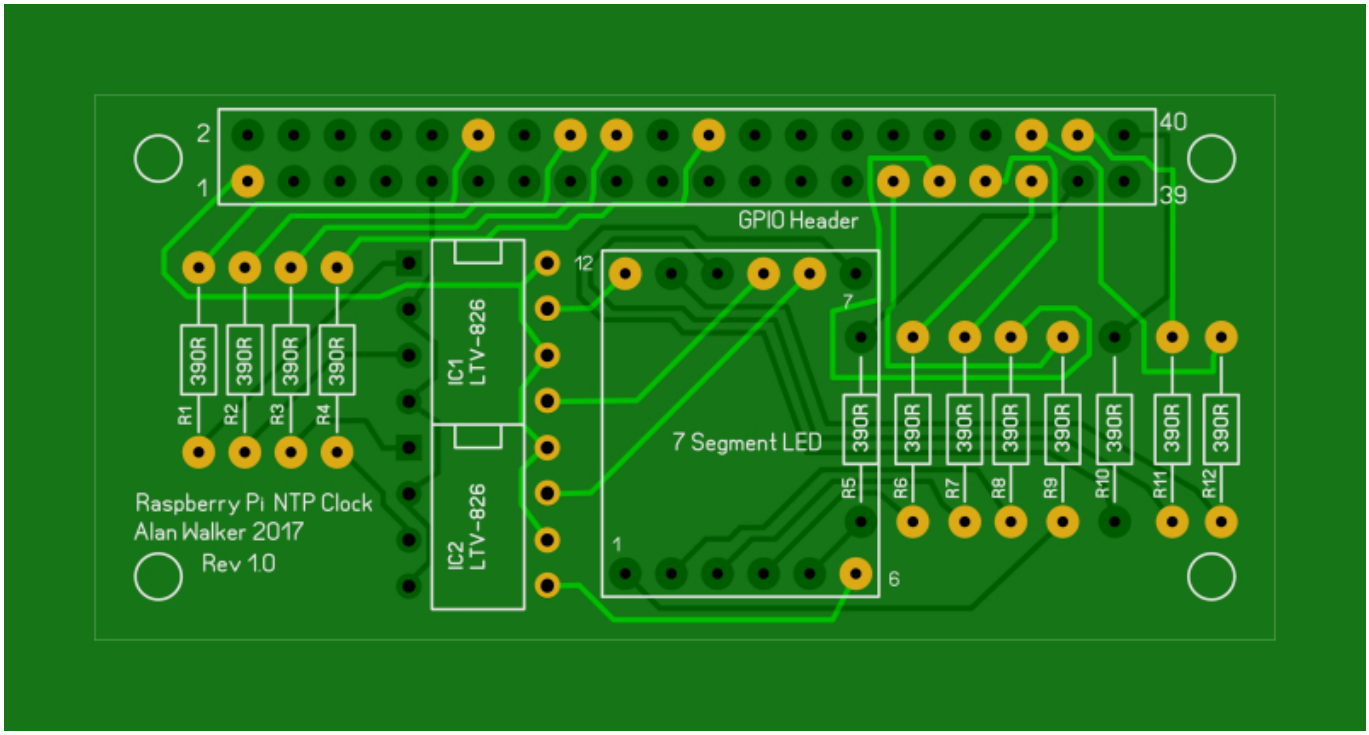

```
Top Layer Silkscreen
```

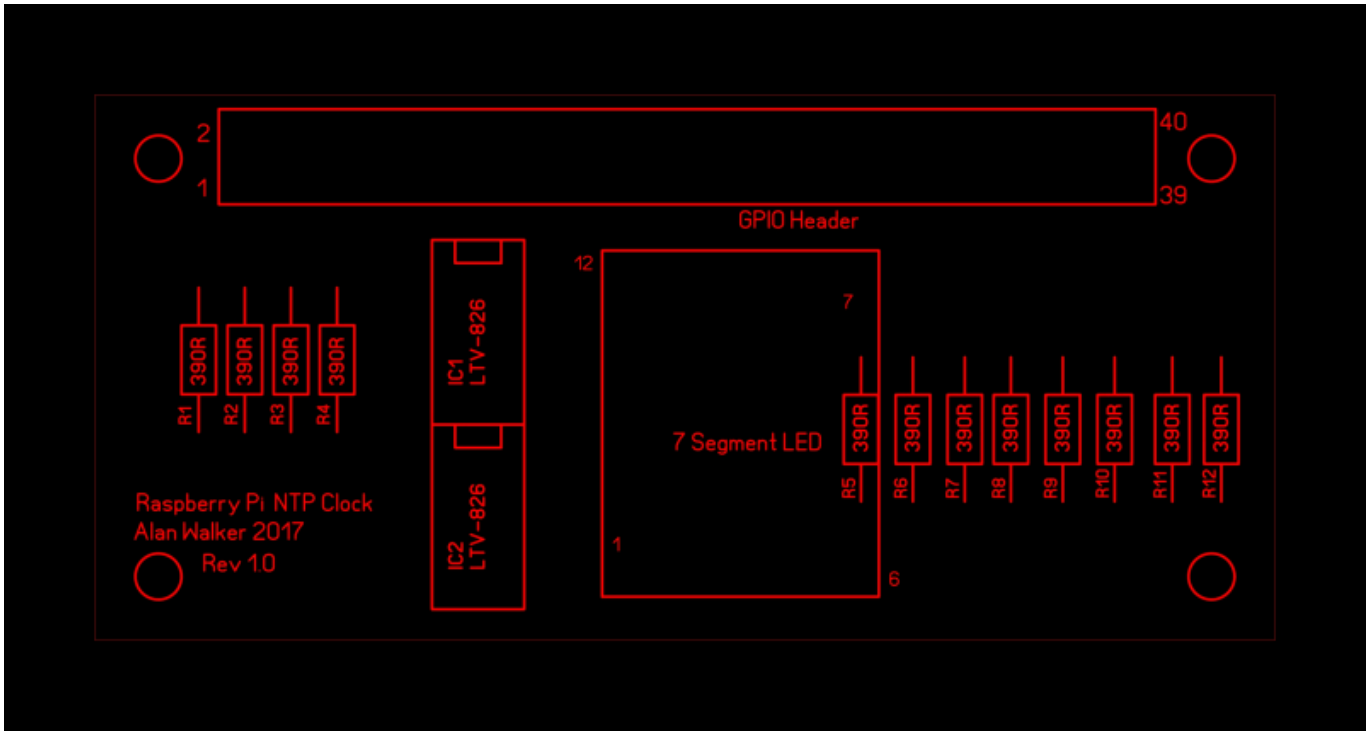


```
Top Layer Copper
```

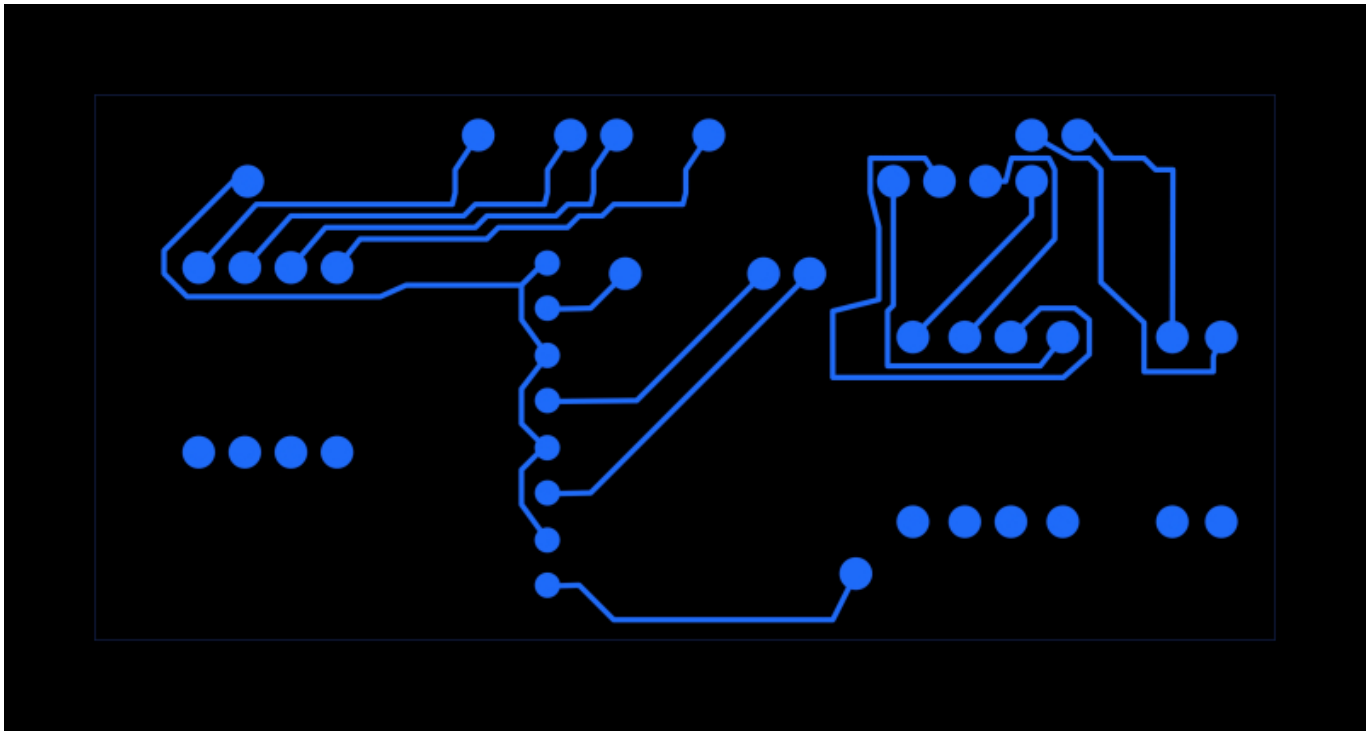

```
Bottom Layer Copper
```

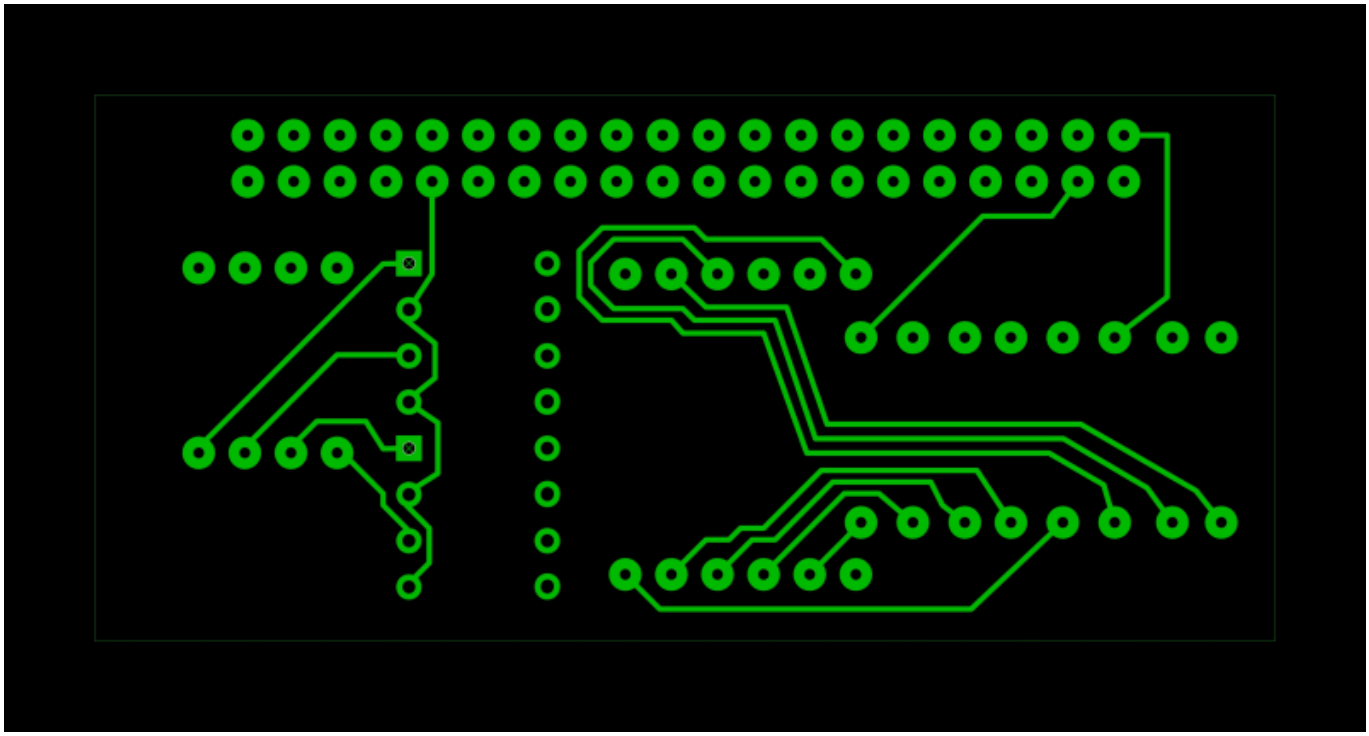

If I have created this correctly, the PCB should be exactly the same size as the Raspberry Pi Zero (1, 1.3 and W) which is 65mm x 30mm (excluding edge connectors such as USB and HDMI) and the four corner holes should line up.

Gerber Files

If you wish to get your own PCBs made, you can use the attached Gerber files

Here

. However I have not had any made myself yet, so you might want to either wait, or create your own PCB.

PCB File

This is the PCB Layout file, produced in software called Sprint Layout v6.0 http://www.abacom-online.de/uk/html/sprint-layout.html. The PCB file can be downloaded

Here

.

From:
https://wiki.alanwalker.uk/ - **WalkerWiki - wiki.alanwalker.uk**

Permanent link:
https://wiki.alanwalker.uk/doku.php?id=circuit_and_pcb_layouts&rev=1488805029

Last update: **2023/03/09 22:35**